Passive Speed Sensors

General Purpose

Ordering Part #	Thread Length (A)	
70085-1010-001	1.125	(28.57)
70085-1010-003	2.625	(66.67)
70085-1010-018	3.625	(92.07)
70085-1010-118	5.000	(127.00)

(Select cable from group “A”, see index)

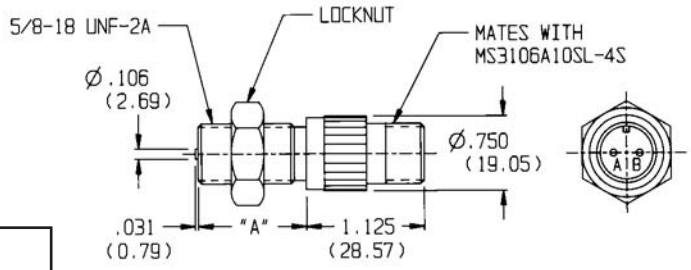

Performance Curves

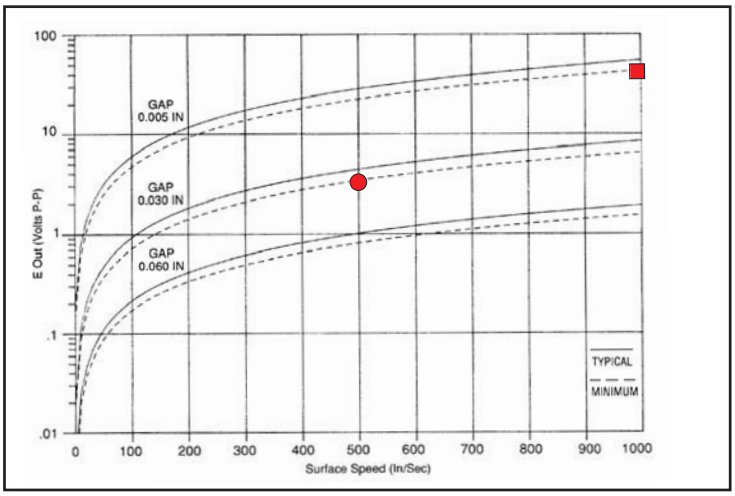

Based on 20 D.P. Gear

Specifications:

- Output Voltage (Standard): 40 V (P-P)
- Output Voltage (Guarantee Point): 3.4 V (P-P)

DC Resistance: 130 ohms max.
Typical Inductance: 33 mH ref.
Output Polarity: Pin ‘B’ positive
Operating Temperature: -55 to +107°C
Net Weight: 5 oz. max.

High Sensitivity

Ordering Part #	Thread Length (A)	
70085-1010-002	1.125	(28.57)
70085-1010-175	2.625	(66.67)
70085-1010-026	3.625	(92.07)
70085-1010-408	5.000	(127.00)

(Select cable from group “A”, see index)

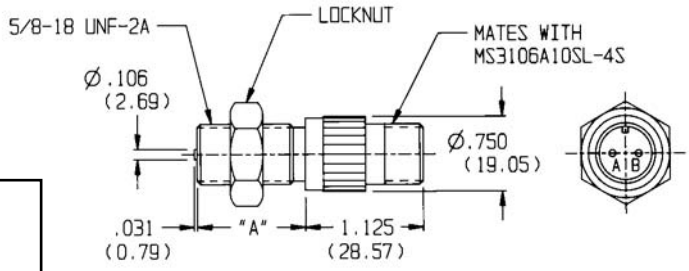

Performance Curves

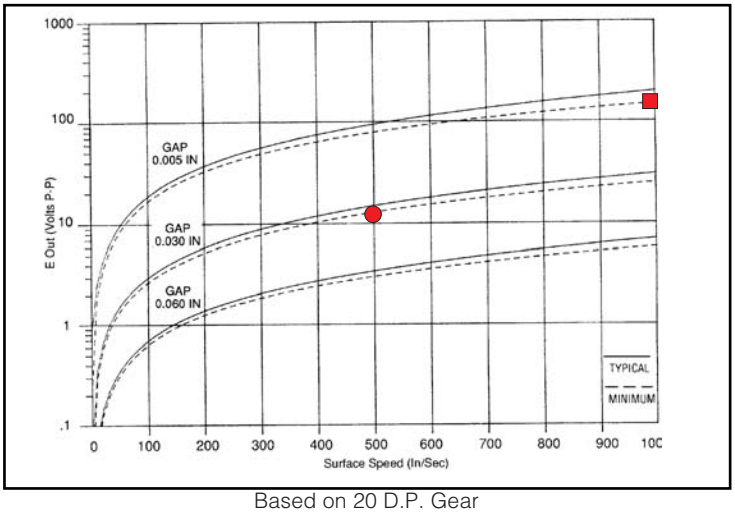

Based on 20 D.P. Gear

Specifications:

- Output Voltage (Standard): 150 V (P-P)
- Output Voltage (Guarantee Point):12.9 V (P-P)

DC Resistance: 1500 ohms max.
Typical Inductance: 360 mH ref.
Output Polarity: Pin ‘B’ positive
Operating Temperature: -55 to +107°C
Net Weight: 5 oz. max.

Dimensions in inches and (mm).

AI-Tek Instruments, Cheshire, CT USA

Passive Speed Sensors

Power Output

Ordering Part #	Thread Length (A)	
70085-1010-028	1.437	(36.50)

(Select cable from group “A”, see index)

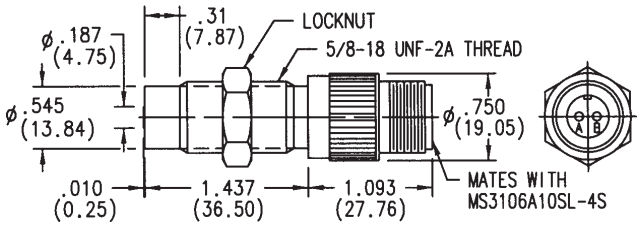

Performance Curves

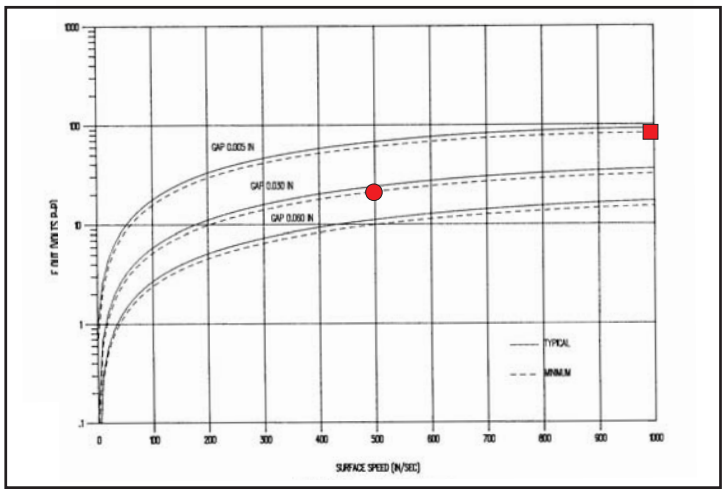

Based on 8 D.P. Gear

Specifications:

- Output Voltage (Standard): 75 V (P-P)
- Output Voltage (Guarantee Point): 21.5 V (P-P)

DC Resistance: 210 ohms max.
Typical Inductance: 50 to 95 mH ref.
Output Polarity: Pin "B" positive
Operating Temperature: -73 to +107° C
Net Weight: 2.2 oz. max.

Conduit Fitting – General Purpose

Ordering Part #	Thread Length (A)	
70085-1010-004	1.125	(28.57)
70085-1010-469	2.750	(69.85)

Performance Curves

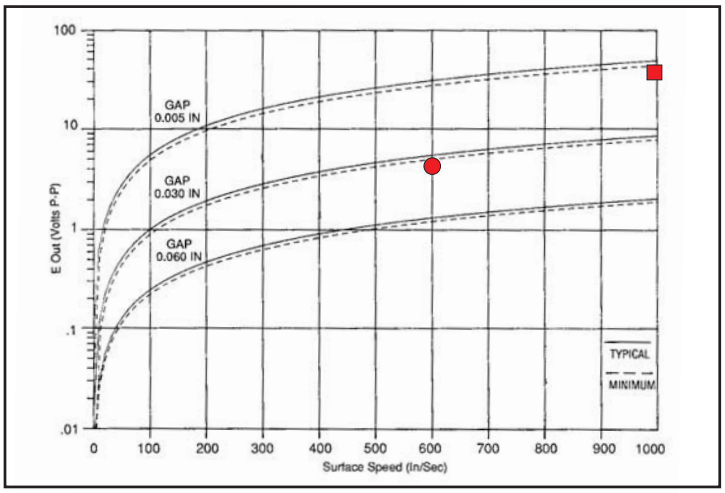

Based on 20 D.P. Gear

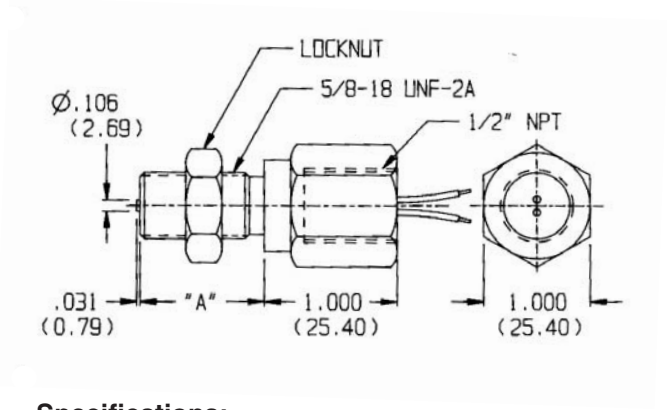

Specifications:

- Output Voltage (Standard): 43 V (P-P)
- Output Voltage (Guarantee Point): 4.3 V (P-P)

DC Resistance: 130 ohms max.
Typical Inductance: 32-46 mH ref.
Output Polarity: Red lead positive
Operating Temperature: -73 to +107°C
Lead length: 10 ft (3.05 m)
Net Weight: 16 oz. max.

Dimensions in inches and (mm).

Passive Speed Sensors

Full Thread – Power Output

Ordering Part #	Thread Length (A)	
70085-1010-131	1.80	(45.72)
70085-1010-214	3.06	(77.72)

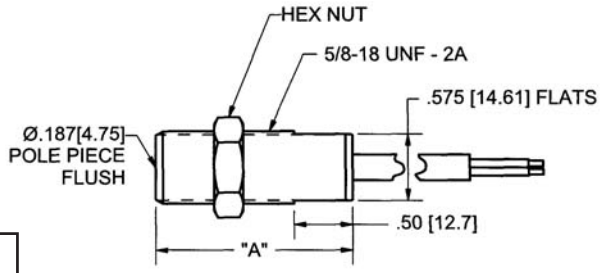

Performance Curves

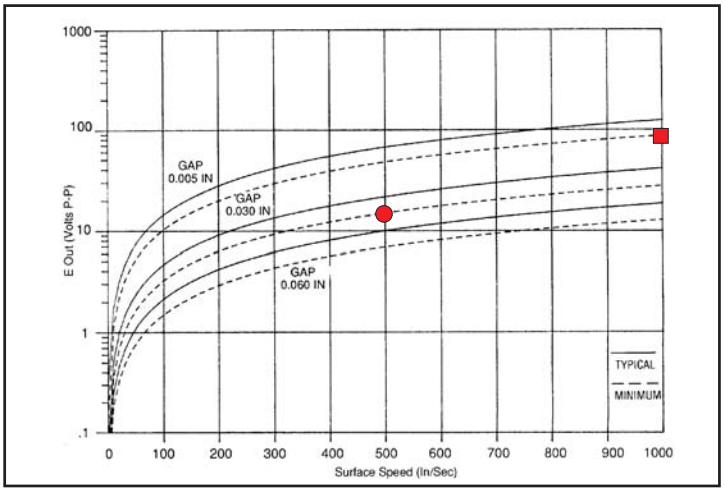

Based on 8 D.P. Gear

Specifications:

- Output Voltage (Standard): 120 V (P-P)
- Output Voltage (Guarantee Point):15.1 V (P-P)

DC Resistance: 250 ohms max.
Typical Inductance: 40-60 mH ref.
Output Polarity: White lead positive
Operating Temperature: -55 to +107° C
Cable Length: 10 ft (3.05 m)
Net Weight: 5 oz. max.

Full Thread – General Purpose

Ordering Part #	Thread Length (A)	
70085-1010-078	1.80	(45.72)
70085-1010-137	3.06	(77.72)

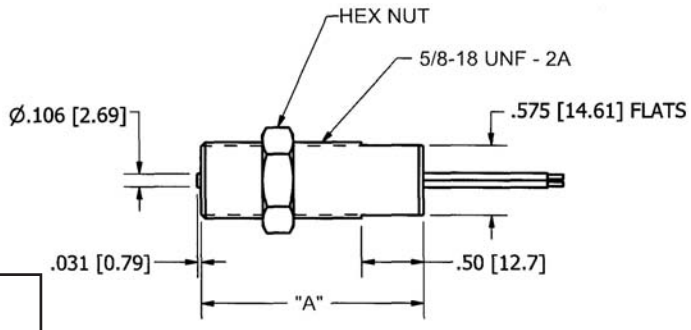

Performance Curves

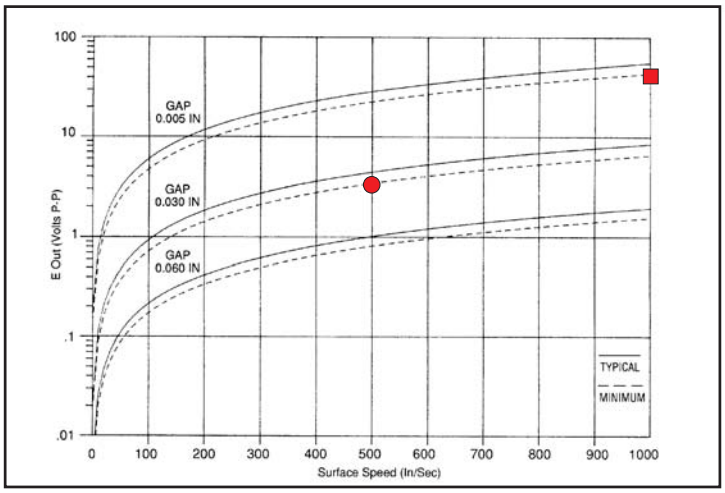

Based on 20 D.P. Gear

Specifications:

- Output Voltage (Standard): 40 V (P-P)
- Output Voltage (Guarantee Point): 3.4 V (P-P)

DC Resistance: 130 ohms max.
Typical Inductance: 33 mH ref.
Output Polarity: white lead positive
Operating Temperature: -55 to +107°C
Lead Length: -078, 12 in (30.5 cm)
-137, 24 in (60.9 cm)
Net Weight: 3 oz. max.

Dimensions in inches and (mm).

AI-Tek Instruments, Cheshire, CT USA

Passive Speed Sensors

Molded

Ordering Part #	Thread Length (A)	
70085-1010-421	2.475	(62.87)
70085-1010-425	3.000	(76.20) * M16 x 1.5 Thd.
70085-1010-424	4.493	(114.12)

(Select cable from group “A”, see index)

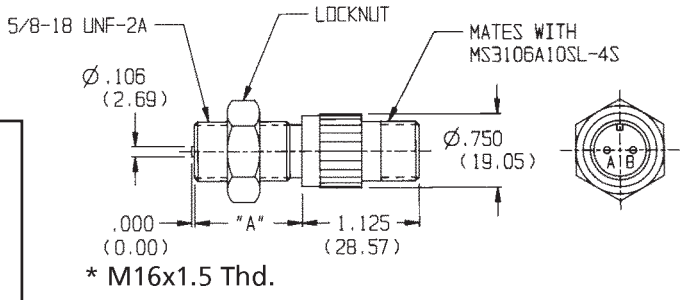

Performance Curves **

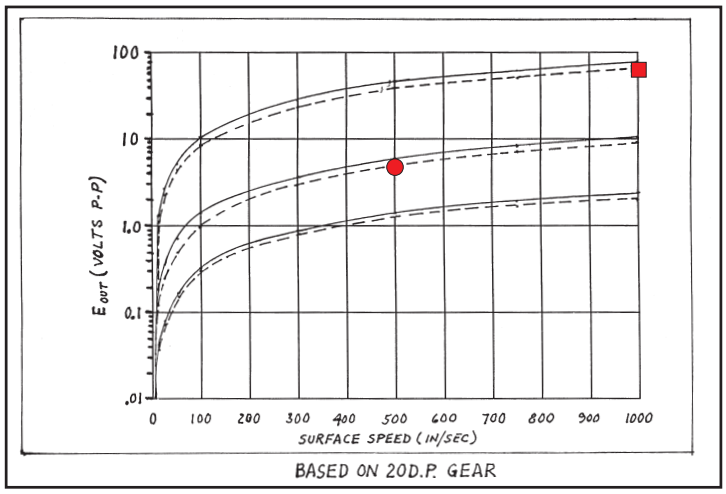

Specifications:

- ■ Output Voltage (Standard): 63 V (P-P)
- ● Output Voltage (Guarantee Point): 4.9V (P-P)

DC Resistance: 250 ohms max.
Typical Inductance: 63 mH ref.
Output Polarity: Pin ‘B’ positive
Operating Temperature: -55 to +107° C
Net Weight: 5 oz. max.

Dimensions in inches and (mm).

AI-Tek Instruments, Cheshire, CT USA

Passive Speed Sensors

General Purpose

Ordering Part #	Thread Length (A)	
70085-1010-007	.812	(20.62)
70085-1010-056	3.625	(92.08)

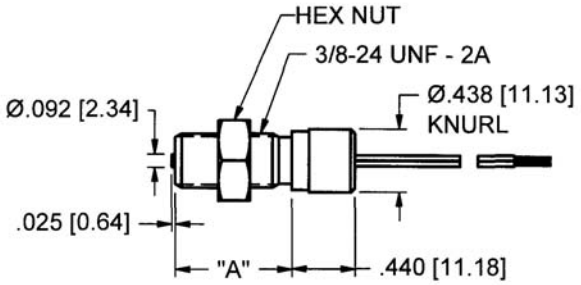

Performance Curves

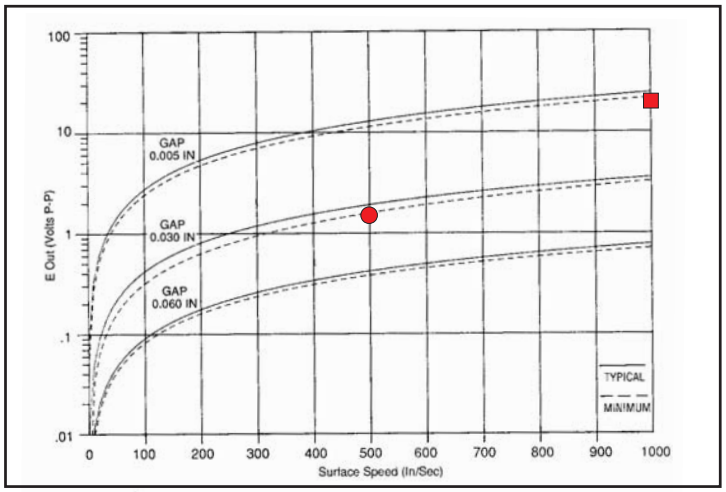

Based on 20 D.P. Gear

Specifications:

- Output Voltage (Standard): 21 V (P-P)
- Output Voltage (Guarantee Point): 1.6 V (P-P)
- DC Resistance: 125 ohms max.
- Typical Inductance: 22 mH ref.
- Output Polarity: White lead positive
- Operating Temperature: -55 to +107°C
- Lead Length: 6 in (15.2 cm)
- Net Weight: 2 oz. max.

High Sensitivity

Ordering Part #	Thread Length (A)	
70085-1010-086	.812	(20.62)
70085-1010-355	.812	(20.62)

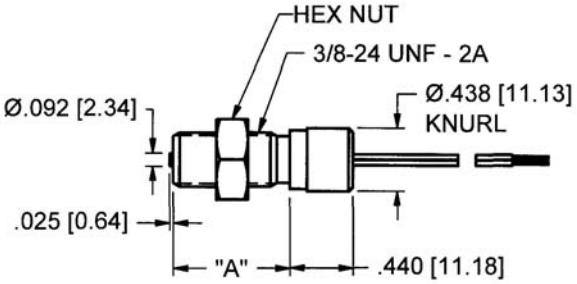

Performance Curves

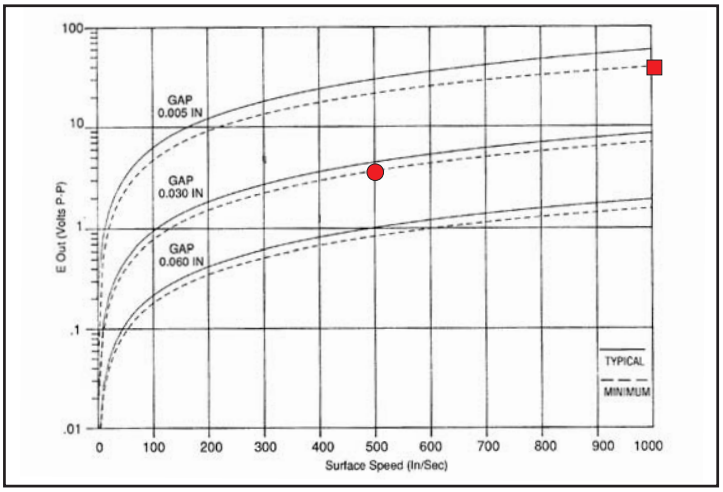

Based on 20 D.P. Gear

Specifications:

- Output Voltage (Standard): 55 V (P-P)
- Output Voltage (Guarantee Point): 4.2V (P-P)
- DC Resistance: 960 ohms max.
- Typical Inductance: 125 mH ref.
- Output Polarity: White lead positive
- Operating Temperature: -55 to +107°C
- Lead Length: -086, 18 in (45.7 cm)
- Cable Length: -355, 40 in (101.6 cm)
- Net Weight: 2 oz. max.

Dimensions in inches and (mm).

Al-Tek Instruments, Cheshire, CT USA